This is a digital copy of a book that was preserved for generations on library shelves before it was carefully scanned by Google as part of a project to make the world's books discoverable online.

It has survived long enough for the copyright to expire and the book to enter the public domain. A public domain book is one that was never subject to copyright or whose legal copyright term has expired. Whether a book is in the public domain may vary country to country. Public domain books are our gateways to the past, representing a wealth of history, culture and knowledge that's often difficult to discover.

Marks, notations and other marginalia present in the original volume will appear in this file - a reminder of this book's long journey from the publisher to a library and finally to you.

Usage guidelines

Google is proud to partner with libraries to digitize public domain materials and make them widely accessible. Public domain books belong to the public and we are merely their custodians. Nevertheless, this work is expensive, so in order to keep providing this resource, we have taken steps to prevent abuse by commercial parties, including placing technical restrictions on automated querying.

We also ask that you:

+ *Make non-commercial use of the files* We designed Google Book Search for use by individuals, and we request that you use these files for personal, non-commercial purposes.

+ *Refrain from automated querying* Do not send automated queries of any sort to Google's system: If you are conducting research on machine translation, optical character recognition or other areas where access to a large amount of text is helpful, please contact us. We encourage the use of public domain materials for these purposes and may be able to help.

+ *Maintain attribution* The Google "watermark" you see on each file is essential for informing people about this project and helping them find additional materials through Google Book Search. Please do not remove it.

+ *Keep it legal* Whatever your use, remember that you are responsible for ensuring that what you are doing is legal. Do not assume that just because we believe a book is in the public domain for users in the United States, that the work is also in the public domain for users in other countries. Whether a book is still in copyright varies from country to country, and we can't offer guidance on whether any specific use of any specific book is allowed. Please do not assume that a book's appearance in Google Book Search means it can be used in any manner anywhere in the world. Copyright infringement liability can be quite severe.

About Google Book Search

Google's mission is to organize the world's information and to make it universally accessible and useful. Google Book Search helps readers discover the world's books while helping authors and publishers reach new audiences. You can search through the full text of this book on the web at `http://books.google.com/`

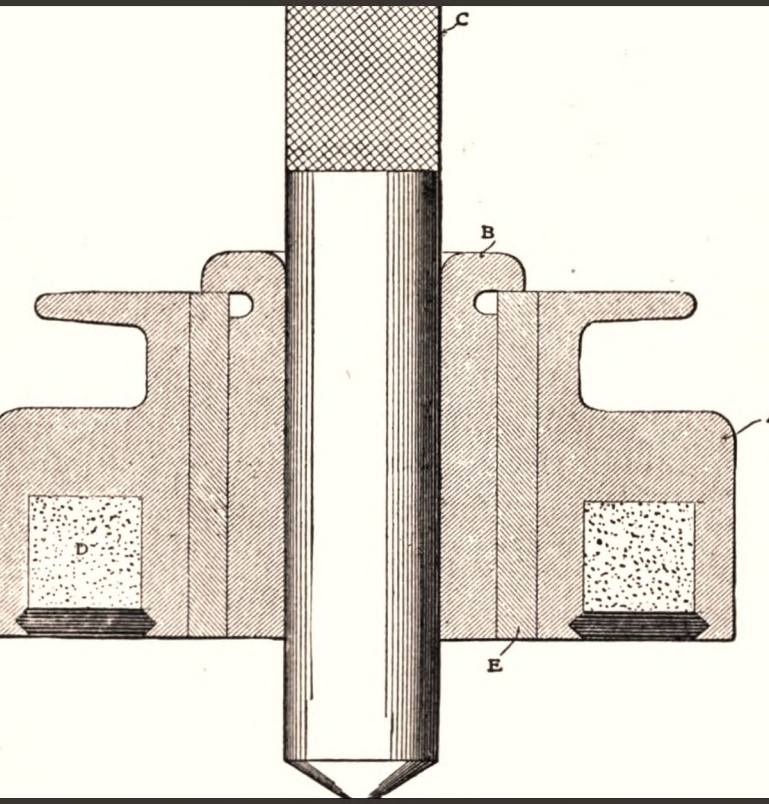

Jig and fixture kinks

Fred Herbert Colvin, Frank Arthur Stanley

Digitized by Google

East Engin.
Library

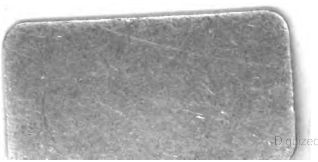

Digitized by Google

East Engin.
Library
TJ
1185
.C727j

Digitized by Google

Digitized by Google

THE HILL KINK BOOKS

JIG AND FIXTURE KINKS

Digitized by Google

THE HILL KINK BOOKS

Compiled by F. H. COLVIN and F. A. STANLEY
Associate Editors of the *American Machinist*

Each cloth, 4x6, illustrated, 50 cents postpaid

ORDER NOW

PRESS TOOL KINKS
SCREW THREAD KINKS
PATTERNMAKING KINKS
MILLING MACHINE KINKS
REPAIR KINKS
TOOLMAKERS' KINKS
JIG AND FIXTURE KINKS
DRILL PRESS KINKS
DRAWING ROOM KINKS
SCREW MACHINE KINKS

McGRAW-HILL BOOK COMPANY

PUBLISHERS, BOOKSELLERS AND IMPORTERS

239 WEST 39TH STREET, NEW YORK

6 BOUVERIE STREET, LONDON, E.C.

Digitized by Google

THE HILL KINK BOOKS

Jig and Fixture Kinks

COMPILED BY

F. H. COLVIN AND F. A. STANLEY

Associate Editors of the American Machinist

FIRST EDITION
THIRD IMPRESSION

McGRAW-HILL BOOK COMPANY, INC.
239 WEST 39TH STREET, NEW YORK
6 BOUVERIE STREET, LONDON, E.C.
1908

Digitized by Google

Copyright, 1908, by the Hill Publishing Company

Digitized by Google

3 17 June '15 $1.40

INTRODUCTORY WORD

THE kinks and other information given in this book have been selected from the experience of thoroughly practical men, as originally published in the *American Machinist*. This volume forms one of a series of this nature, aiming always to make available out-of-the-way information when most wanted. In this form the Kink Books, which can be kept in the tool-chest or the pocket, and always referred to, will, we feel, meet a demand and serve a good purpose.

F. H. COLVIN.
F. A. STANLEY.

NEW YORK, November, 1907.

Digitized by Google

Digitized by Google

JIG AND FIXTURE KINKS

PROCESSES OF JIG MAKING

It seems proper, in this kink book, that a few hints on the methods in use in up-to-date shops for the building of parts of jigs and especially the exact locating of holes be given. It is our intention to present to the readers of this book some special appliances and improvements that are employed for doing work rapidly and accurately that in many instances is done less perfectly and at greater expense by other methods.

For an example, we will first select a jig that will swing on the large face-plate of an 18-inch lathe. Should it be a casting the first thing to be done after receiving it from the foundry is to carefully plane all bearing parts and the ends of the legs, and if square or rectangular in shape it should have the sides and ends parallel

280352

Digitized by Google

and at exact right angles. File off the sharp corners and try the jig on a surface plate that should be in excellent condition and used only for laying out jigs and testing them. If the legs upon examination are found to be uneven, scrape them until all four rest evenly on the surface plate. We now select one side and end to work from, having obtained from the room where the shop tools are kept a Brown & Sharpe hight gage with the extension that can be attached to the movable jaws; a lathe indicator; straps and bolts to hold the jig on the face-plate; drills, and the necessary number of buttons that should be carefully shaped and accurately made to size. The sketch, Fig. 1, shows a button of convenient form and length. On examination of the drawing it will be noticed that it is cupped out on the under side to permit it to rest perfectly even on the face of the jig and to obviate any possibility of the slightly elevated metal around the hole where the screw enters throwing it out of true.

Too much care cannot be exercised in the making of these neat little tools; they should be made of tool steel, hardened and ground square

Digitized by Google

on the ends to about $\frac{5}{8}$ inch long, the diameter after grinding being lapped to a standard size. Half-inch is a very convenient size and the decimal is easy to remember when adding or subtracting the readings of the vernier on the hight gage. The holes in the buttons should be about $\frac{1}{32}$ inch larger than the diameter of the

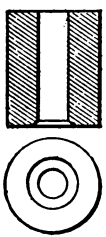

FIG. 1. — Jig Button.

body of the screws, used to hold them in the jig, to allow for moving the buttons to get them exactly in position.

Lay out the center points for the number of holes called for in the jig, using either the top or bottom to drill from. It is usual to select the side with a surface that is even and best adapted to work from and to fasten buttons on. The

Digitized by Google

holes for the screws do not have to be accurately located when having $\frac{1}{32}$ inch play in each button for adjustment when finally placing them the correct distance from the working sides.

The drilling and tapping of the holes for the button screws having been done, the next move is to get the center of the buttons placed on the side of the jig that is being worked from correctly in position according to the distances given on the drawing. We have from experience found the Brown & Sharpe vernier depth gage a useful tool to aid in obtaining distances on jigs that have plane surfaces; use the hight gage and surface plate to measure the distance from one side and the depth gage from the end. By the use of two measuring tools we do away with the work of continually setting and resetting the hight gage to fix a single button in place. After all the buttons are screwed tightly on the jig in their exact positions, strap it on the face-plate of a lathe that runs true, taking the necessary precaution to avoid springing the jig when tightening up on the straps sufficient to hold it for machining the holes. Indicate one of the

Digitized by Google

buttons to run true, remove it and drill and bore the hole the required size for the bushing; indicate the second button and perform the same operations as with the first and continue the work until all of the holes are machined in the jig that the drawing calls for.

Make the bushings from tool steel, leaving in the hole from .001 inch to .002 inch to lap out and sufficient on the outside to grind; harden and lap the holes to size, place the bushings one at a time on a mandrel and grind the outside a little larger than the hole it is to enter — say about .0005 inch larger. A good way is to grind the diameter of the lower end up for about $\frac{1}{16}$ inch .0005 inch below the size of the hole in the jig; this part will enter easily and act as a guide when forcing the bushings home.

Bushings with holes in them too small to work advantageously on a mandrel are generally turned to size in the lathe before cutting them off the end of the stock and are not ground after hardening.

All the bushings having been finished and pressed into the holes in the jig, the position of

Digitized by Google

the pins or stops for guiding the work should now be ascertained; use the hight gage and surface plate and work from the same side and end as was done when obtaining the position of the button.

The remaining requirements, such as clamps, binders and other fixtures for holding the piece to be drilled, should now be added. If the work throughout all of the operations has been carefully performed, the jig will probably be perfect, or so near correct that the error may be safely neglected.

Let us now consider a method for locating the holes in a jig that is too long and clumsy to swing on the face-plate economically. In place of the lathe, and as important and advantageous for this class of work, is the milling machine. Having accurately planed and scraped our jig, we bolt to the table of a good universal milling machine an angle-plate, parallel with the travel of the table, and of sufficient hight and length to rigidly support our work. Clamp the jig to the angle-plate with the top of it towards the spindle of the miller, placing between the work and its

Digitized by Google

support thin parallels to give clearance for the ends of the drills and cutters when machining the holes.

The tools for obtaining the holes in a jig are: a flat drill to spot with, a twist drill $\frac{1}{32}$ inch below size, and an end mill, with a sharp end cut and having the corners perfectly square, to true the hole with and to correct any errors of the drill. Sharp and square corners on the end mill are absolutely necessary to make the hole perfect, as round-cornered mills are apt to follow the hole previously made. It will be economical, advantageous and convenient for quick and easy handling of the tools, to have fitted in the spindle of the milling machine a draw-in chuck to hold $\frac{1}{2}$-inch work, and to have the shanks of the drills and cutters ground straight and all of a size to fit the chuck.

It is important, and quite frequently necessary, to have the working ends of the tools short in order to facilitate their rapid removal and insertion in the chuck without disturbing the jig; but, whatever the appliances may be for holding the drills and cutters, it is well to use as short

Digitized by Google

ones as are convenient, in order to minimize any imperfections in the running of them, should they chance to exist.

To get the best and most satisfactory results as regards the moving forward of the milling-machine table the necessary distance to exactly locate the second hole, it is important to have attached a vernier appliance to quickly and accurately obtain the correct measurement, and not depend on the readings of the adjustable dials that indicate the different movements of the table when making measurements for long distances, on account of the greater wear on the horizontal screw in the middle than at the ends.

Supported on the front of the horizontal table of a Brown & Sharpe milling machine, by means of screws and dogs that enter the T-slot where the automatic stops are located, is a bracket that should be about as long as the travel of the table; let in this bracket, in a suitable position for reading, is an adjustable scale graduated to $\frac{1}{40}$-inch, the same as a vernier caliper. Fastened by screws and dowel-pins to the saddle, adjacent to the hand-feed lever, is a small rigid support

Digitized by Google

which has on its upper end, conveniently inclined for reading, the familiar little auxiliary vernier scale that just touches the long one which is adjustable parallel with the table, so that it can be moved along the necessary distance to bring the inch-mark in line before a measurement is taken, in order to more easily calculate the decimal.

To obtain the vertical distances, this same means is sometimes employed, being similarly arranged on the machine at the side where the knee gib bears. We have found it about as convenient, however, to have fitted in the spindle of the milling machine a 1-inch testing arbor, and from this to the table the distance can be measured with a hight gage each time the table is moved up or down. While we consider this plan an excellent and quick way of making an accurate jig, there is, as in all such cases, some diversity of opinion on the subject, some regulating their practice to suit the condition existing in their own particular shop, and others to suit merely their own ideas.

Digitized by Google

ACCURACY IN JIG AND FIXTURE WORK

THE method of using buttons in locating holes in jigs and fixtures, without a doubt is one of the most accurate, as it has come to be one of the most universal, methods in use. A good many tool-makers have confined the use of buttons to work that could be swung in a lathe. Since getting acquainted with this method and learning its usefulness, we have used it successfully on all available work, not only such as can be swung in the lathe, but also on work that is too large for the lathe, and which must be done in the milling machine, and for this class of work we have designed a special indicator for setting the buttons in perfect alinement with the milling-machine spindle. An example of the usefulness of this method may be found in a large leaf drill for the side frame plates of a cash register, with numerous bushing holes in the leaf, which is too large to be swung in the lathe. The location of the holes could, no doubt, be accomplished in several ways, of which the block method is one. By this method a square block with the hole

Digitized by Google

accurately through its center is located on the leaf by its outer sides, clamped in position and used as a jig bush for the drill. Great care must be used with this method, as it allows an error to be made too easily.

Another method would consist of placing the leaf on the milling machine and using the graduated dials of the machine, but this method seldom gives the most accurate results, especially after the screws have become worn by use. No doubt there are many more methods that could be mentioned, but we think there are few more accurate than the use of the buttons and the indicator shown in Fig. 2.

The leaf of the jig is first "buttoned up," this being a familiar shop term used when applying the buttons to a piece of work. It is needless to go into details here about buttoning up work, as that has just been thoroughly described. After this is accomplished the leaf is placed on the milling machine, against an angle-plate, to which it is held by clamps, as shown in Fig. 3. The indicator is then placed in the spindle of the machine and applied to a button, thus truing it

Digitized by Google

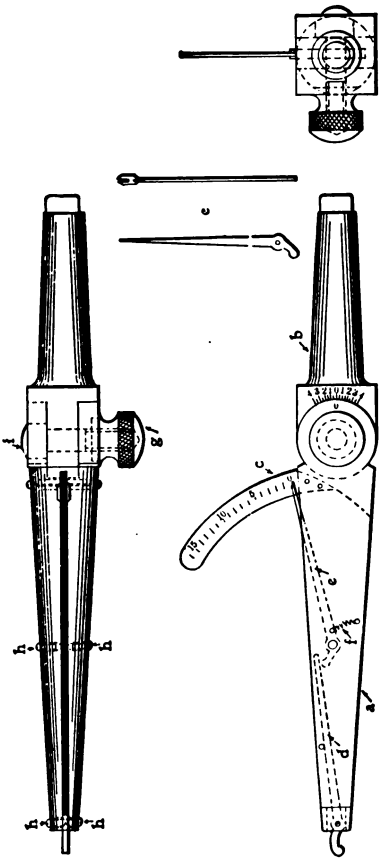

FIG. 2. — Indicator for Milling Machine.

Digitized by Google

perfectly with the center of spindle, after which the hole is made with a drill and boring tool.

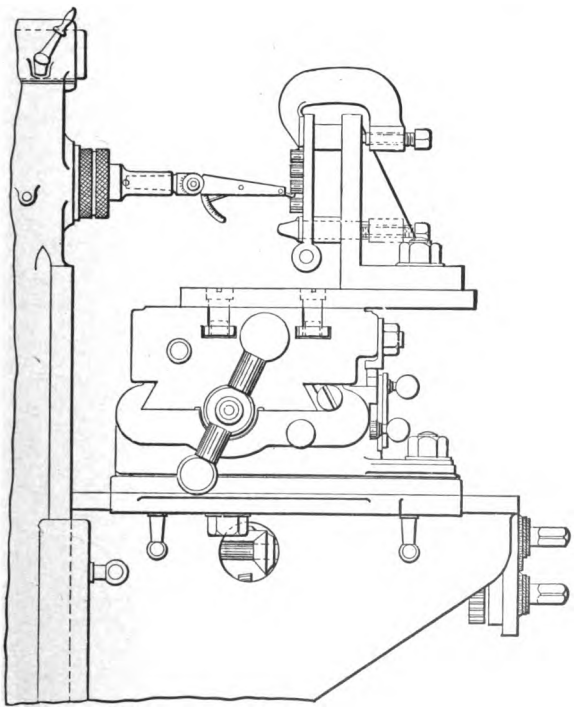

FIG. 3. — Indicator and Work in Miller.

Another button we sometimes use is made as shown in Fig. 4 at *c*. This button is hardened,

Digitized by Google

ground and lapped to fit a ring gage, $\frac{1}{2}$ inch in diameter being a very convenient size. As will be seen from Fig. 3, the angle-plate rests on two special parallels, which in turn are bolted to the milling-machine table. The object of letting the angle-plate project over the side of

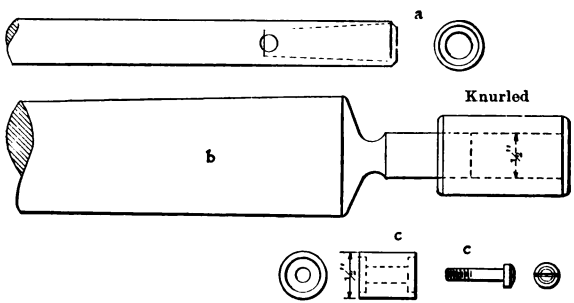

FIG. 4. — Staff for Indicator, Arbor and Bushing, Button and Screw.

the table on the parallels is to permit the insertion of the tools in place of the indicator without disturbing the longitudinal position of the table, the tools being inserted by the use of the cross-feed screw.

The indicator is shown in Fig. 2. The shank *b* is fitted to a Brown & Sharpe small taper. On

Digitized by Google

this shank is milled a tongue which fits into part *a*, and is graduated to facilitate setting the instrument to describe a circle from any diameter from 0 to 4 inches. When the zero mark on *a* is in line with a similar mark on *b* the point of the indicator lever which comes into contact with the work will revolve on the center. There are eight graduations on each side of zero, each line giving a $\frac{1}{4}$-inch movement. That is, to describe a $\frac{1}{2}$-inch circle the zero line on *a* would be set in line with the first line from the zero on *b*, and similarly the other figures on *b* denote the circle the point will describe. The tongue and groove joint is held firm by the nurled nut and bolt *g* and *i*. The body *a* is slotted through its center to receive the two levers *e* and *d*, which swing on small pivot screws *h* having 60 degree points. A small and delicate spiral spring *f* tends to hold lever *e* to zero on the graduated plate *c* and also gives pressure against lever *d*, which in turn acts on the work. A little stop-pin above lever *d* holds the levers in position when at rest. A detail sketch of lever *e* shows the index end to be forked to read against graduations on both

Digitized by Google

sides of the arc plate *c*. This double graduation permits readings to be taken from either side, as the indicator turns over with the machine spindle. The indicator can be used to true up a hole as well as a projection, and it can also be used to good advantage in the drill press or lathe by placing the shank *b* into a round rod shown in Fig. 4 at *a*.

We have also seen another method in use for locating work on the milling machine, which, however, is not as accurate as the indicator. We refer to the arbor and bushing method, shown in Fig. 4, at *b*. The arbor has its end ground and lapped to the same size as the buttons, and a nurled ring is lapped out a nice sliding fit on the arbor. By placing the arbor in the machine spindle and bringing the jig button close to it and in line with it, so that the nurled ring will slip over the button, it is certain to bring both arbor and button in line. The trouble with this method lies in the failure of the arbor to always run true with the spindle. Should a bit of dirt get between the arbor and spindle, as is often the case, or should the spindle hole not be dead

Digitized by Google

true, the arbor would not be true with the spindle, and an error would result in locating the work.

Another good method that can be used for

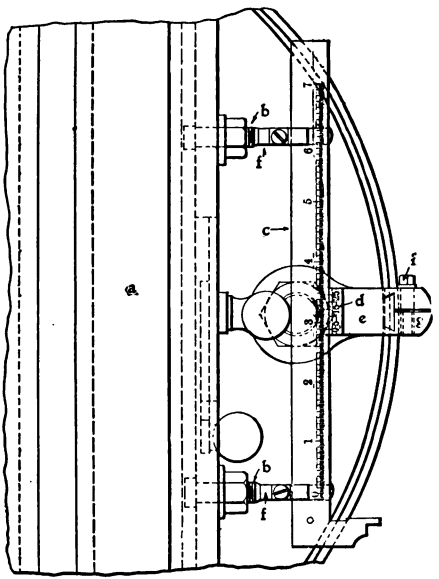

FIG. 5. — Milling Machine with Vernier Attached.

accurately locating distances on the milling machine is shown in Figs. 5 and 6; this being referred to in the preceding article. Accuracy

Digitized by Google

is obtained by using a Brown & Sharpe vernier caliper beam and vernier plate, instead of the graduated dials. On the milling-machine table *a* and into the T-slot which is intended for the

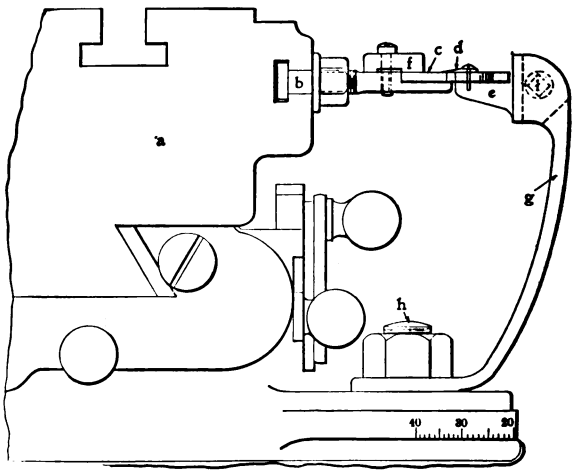

FIG. 6. — Milling Machine with Vernier Attached.

free-tripping studs, two bolts marked *b* are placed. They project out beyond the nuts that hold them in position about 1¼ inches, this outer part having been turned to the size of the root of thread and part of it flatted off to act as a

Digitized by Google

resting place for the vernier caliper beam *c*, which is held in position by two small straps and screws *f*. The forging *g* is held in position by utilizing the forward bolt and nut *h*, that serve to bind the swiveling part of the machine. On the top end of *g* the adjustable block *e* is held by a dovetail milled in *g* and a slot and small-binding bolt *i*. On this block *e* is secured the vernier plate *d*. As can readily be seen, by running the table to and fro and recording the measurements from the vernier, accurate measurements can be made. Accurate up-and-down measurements were made by a little extra device clamped to the column of the machine and end measuring rods of such lengths as the job required, these rods being used between the knee of the machine and the part clamped on the column. One more little kink and this method is complete: By bending a piece of wire around *g* having a loop above to hold a magnifying glass, easy and accurate reading is obtained. This last named method is limited in range and accuracy by the length and accuracy of the vernier.

Digitized by Google

BORING MASTER GAGE PLATES FROM MODELS

VERY accurate tool and gage work is required in most factories at the present time, as the interchangeable system of manufacturing calls for it. Especially the gages require the most accuracy. It is always advisable to make the model first, then the gages and last the tools. If tools and gages are made to models instead of drawings, as in many shops, it is absolutely necessary to make the gages first, in order that they may be perfect to the model, as fitting the model to jigs, fixtures and other tools may interfere with the accuracy of the model. There are some very good systems in some of our large shops for holding everything to a standard. By one method the first step is to make a model machine which is as nearly perfect as mechanical skill can make it. When completed it is assembled to see if it is perfect in all details, and if found perfect it is taken apart and the gages are made to fit the parts in the most accurate manner. Three sets of duplicate gages are always made,

Digitized by Google

one of which goes to the inspecting department, the second to the manufacturing department, and the third is held in reserve and only used as reference or master gages. This last set acts as a tell-tale to all mistakes, and as a standard for working gages or tools that may need renewal at any future time. Among these master gages are master plates, which serve to hold standard the size and location of a number of holes. A very neat way to make such master plates is as follows: Plane or grind a piece of steel so that it will be perfectly parallel and about $\frac{3}{8}$ inch thick. Clamp it to the model piece, opposite the side on which the holes in the model were located, with a thin piece of steel between model and master plate, so that when boring the holes in the plate no damage will be done to the model (see Fig. 7). Fit a piece of steel to the spindle of the lathe as though it were to be a live center, allowing it to project beyond the face-plate far enough to be turned off a perfect fit to the largest hole in the model. Care should be taken that the face-plate runs perfectly true. After turning the stud to a perfect fit for the first hole, the model with the

Digitized by Google

master plate is slid on and clamped to the face-plate. The first hole in master plate is then bored with an allowance of .002 for grinding after the master plate is hardened. For the second hole select the next size smaller, so that

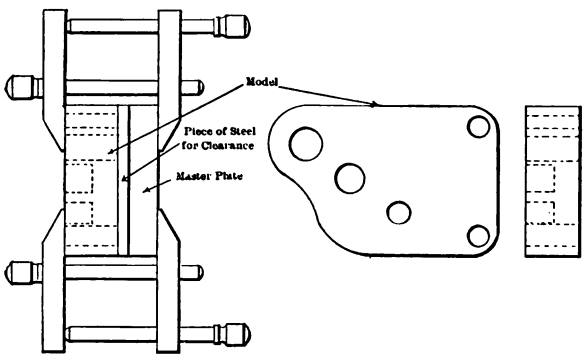

FIG. 7. — Model Master Plate and Protecting Piece Clamped Together.

the same stud will answer for all five holes, and proceed as before, care being taken to have the master plate securely fastened to the model to avoid any chances of slipping. After boring all holes in this manner, the plate is ready for hardening. After hardening the plate is replaced on

Digitized by Google

the model and the holes are ground out to within .0003, which is left for the final lapping to size. Fig. 8 shows the work as swung in the lathe.

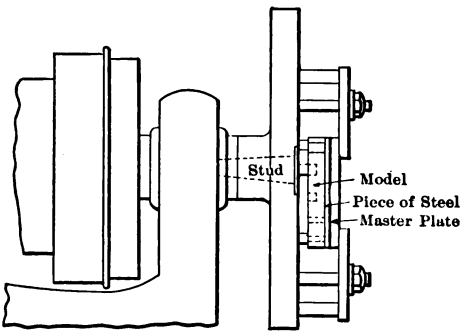

FIG. 8. — Parts Shown in Fig. 7 Swung in Lathe.

Time may be saved by making the stud in two pieces, as in Fig. 9, thus saving the repeated fitting of the taper. The right-hand piece is

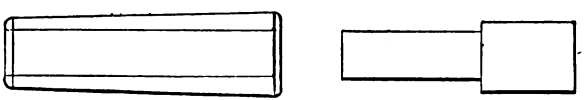

FIG. 9. — The Stud in Two Pieces.

soldered into the sleeve and turned off to form the stud, which, of course, is always turned off in position.

Digitized by Google

In making master plates for watches, electric instruments, clocks and similar work in which the holes in the side plates are to be held to a standard for the train of gears, and the holes are too small to grind out after the master plate is hardened, it is good policy to bore such holes larger than the holes in the model, and after the master plate is hardened, grind the holes out with a diamond-charged lap, used in the same manner as an internal emery wheel. The holes are then bushed, the bushings being hardened and lapped to the same size as the holes in model. A little piece of hardened drill rod is then placed in the spring chuck of a bench lathe, and ground to fit the hole in the bushing. The bushing is then slipped on and ground and lapped to a press fit in the master plate, care being taken that the press fit is not so tight as to interfere with accuacy of plate.

JIG MAKING ON THE GEAR CUTTER

THE fixture shown in Fig. 10 is used on a Brown & Sharpe gear cutter for drilling the bushing

Digitized by Google

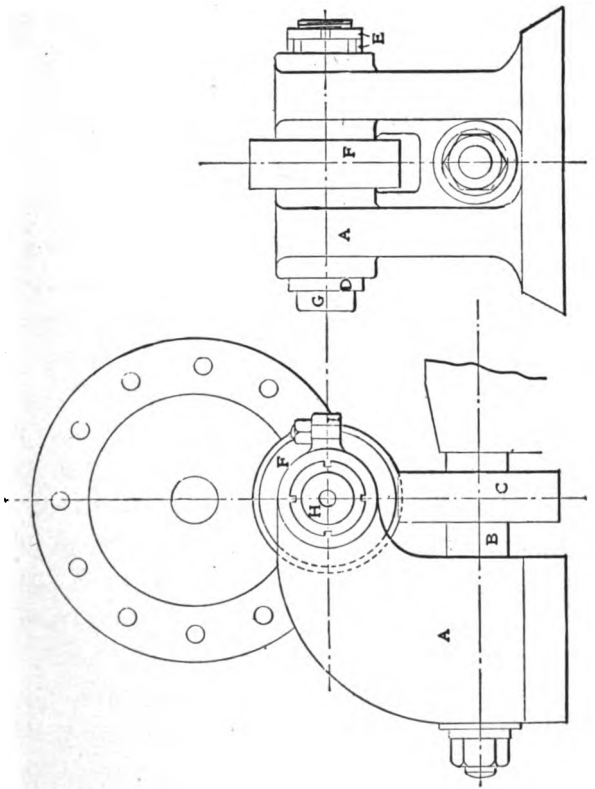

FIG. 10. — Jig Boring on the Gear Cutter.

Digitized by Google

holes in the jigs used for drilling the stud holes in high-speed steam-engine cylinder covers, Corliss valve "bonnets," etc., and in fact any kind of drilling jig which is circular and requires to be set out accurately. It is constructed in the following manner: *A* is a gray iron bracket terminating in two bosses at the top; this bracket takes the place of the outer support to the cutter spindle. The latter is shown at *B* and carries a spiral gear *C* which is mounted upon it in place of the gear cutter. *D* is the steel sleeve with a collar on the front end to take the thrust, and held in position by two lock-nuts *E* at the back end. *F* is a spiral gear which meshes with *C* and drives *D* by a feather. *D* is bored out Morse taper and carries the drill socket *G* which carries the twist drill. *H* is a $\frac{1}{2}$-inch round hole drilled through the back end of sleeve *D*, this hole receiving a rod to knock the drill socket out. *I* is a lug cast on each boss of *A* and split across after *A* is bored, a brass strip being inserted in each slot and the boss tightened up by the set-screws shown to provide for adjustment when the sleeve gets worn. The jig to be drilled is

Digitized by Google

mounted on a suitable mandrel in place of the gear blank, and the cutter slide which carries the drill in motion fed forward the required distance. The slide is then withdrawn automatically, and the machine divides the work for the next hole.

ADJUSTABLE TOOL FOR LOCATING HOLES IN JIGS

FIG. 11 is an adjustable fixture, or drilling jig, which we have found useful, not only as a lazy man's tool, but as a real time-saver as well. The tool was originally designed for laying out and drilling holes in jigs, particularly in those cases where, in place of figures, the workman is given a sample piece and expected to reproduce the holes perfectly enough for the product to fit the original machine; but we have also found it handy when one of those hurry jobs comes that must be fairly accurate and where time is an important factor; for the device may be set, a temporary bushing or stud made and the piece drilled in this manner in less time than the same

Digitized by Google

amount of work can be done in any other way with which we are familiar.

The fixture is composed of a plate or quadrant

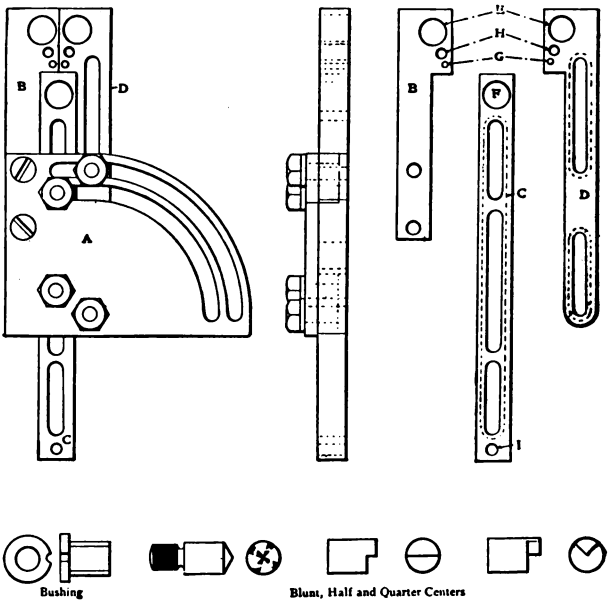

FIG. 11. — Adjustable Device for Locating Holes in Jigs.

A, to which is rigidly fixed, by means of screws, the short arm *B*. The long arms *C* and *D*, which are movable, are secured to the quadrant by

Digitized by Google

means of short bolts, and slotted as shown in the sketch, the under side of each slot being counter milled or recessed to keep the bolts from turning and give a flush surface to the jig when assembled. These arms are interchangeable, and adjustable to any position desired. The holes *E* in *B* and *D* and *F* in *C* are the ones generally used. In the fixture we are using these holes are standard $\frac{1}{2}$ inch; the greatest distance between their centers being, approximately, 8 and 9 inches, and the least $\frac{5}{8}$ and $1\frac{1}{8}$ inches. If it is desired to use the fixture for a center distance less than the above, the smaller holes *G*, *H*, and *I* must be used, reducing the center distances to a little less than $\frac{1}{4}$ and $\frac{1}{2}$ inch. A set of hardened bushings with holes ranging in size from $\frac{7}{16}$ inch down as small as the usual work may call for, as well as a set of studs, should be kept with the jig.

To use the tool, a standard plug is inserted in two or more holes, as the case may require, the arms are opened to the necessary distance by a micrometer, or the angle found by means of the bevel protractor; the nuts are carefully tightened and the center distance is again tested. If still

Digitized by Google

found correct, the standard plugs are removed and bushings, which should be made a hand fit and kept from turning by a small pin or screw passing through the flange, are placed in the jig which is now ready for use.

When one or more holes are to be drilled from one already located, it is necessary to use a stud, one end of which fits the hole to be located from; the other fitting a hole in the jig. When more accurate work is required than can be obtained by drilling, we use this fixture for locating buttons on the work, placing the buttons, which are ½ inch diameter, in the holes in the jig, and using them as bushings for drilling their own screw holes. The buttons are then screwed fast to the work, the jig is removed and it is found that very little adjustment is necessary. Many odd attachments will become connected with a tool of this nature, such as blunt center punches, square-end studs and half centers, as well as disks which have been used in connection with larger holes, etc.

The tool here spoken of is made throughout of tool steel, with the exception of the quadrant.

Digitized by Google

The slots in the arms are broken by cross ribs, and the whole tool is a remarkably light and stiff device and one capable of being closed into the smallest possible space. This becomes an important factor when the tool is a part of the workman's kit.

ANOTHER FIXTURE FOR LOCATING HOLES IN JIGS

THERE are many jobs which have to be done in a hurry and at the same time accurately, and every machinist knows it is no snap to lay out holes and to bore or drill them and find when they are finished that they are within a half-thousandth.

This device in Fig. 12 is simple, yet accurate. You set the hardened bushings *A* by measuring across the outside with the micrometer and when right they are held in place by the little clamps *B*. The hole in each bushing is for a standard-size drill and the holes to be laid out can either be simply spotted or drilled down through as the case may require. The more bushings one has,

Digitized by Google

the better. The sides of the frame for holding them, as well as the sides of the slot, are ground parallel, for in laying out a number of holes you work from a parallel placed to suit the position of the holes.

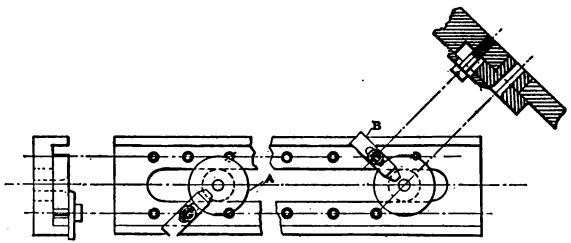

FIG. 12. — Another Fixture for Locating Holes in Jigs.

After you have one or more holes made, a pin is inserted in the bushing and passed through into the hole to be worked from, and the other plugs set as before for the next hole.

POINTS IN JIG MAKING

Fig. 13 illustrates the method of procedure in putting the bushing holes into a long jig. There were a large number of holes, and they were in

Digitized by Google

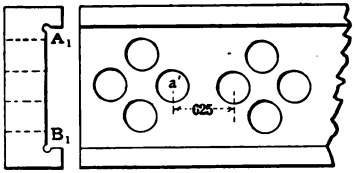

FIG. 13

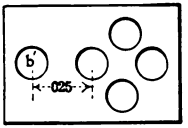

FIG. 14

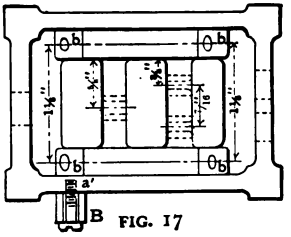

FIG. 17

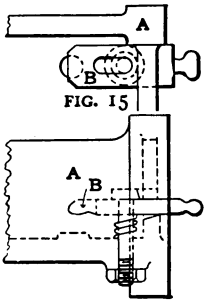

FIG. 15

FIG. 16

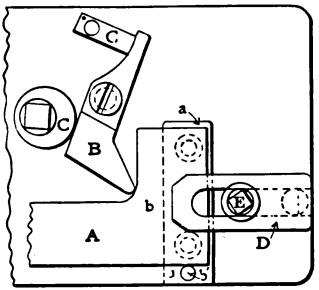

FIG. 19

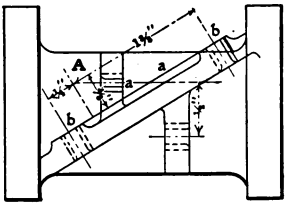

FIG. 18

Points in Jig Practice.

Digitized by Google

sets duplicated at regular intervals for the length of the jig. The method adopted to facilitate putting in the holes was as follows: There were shoulders on raised strips *A B*, Fig. 13, between which the holes were to be located. A templet, Fig. 14, was made of a width to just fit between the strips and long enough to contain one set of the holes and the nearest hole in the next set. The holes of a set were then carefully located and bored in the templet and another hole the required distance away for the first hole in the next set. The templet being completed, it was put into the jig, and, using a spotting drill, a straight drill and a rose reamer, the holes of the first set were drilled and reamed in the jig. The templet was then pushed along until a nicely fitted plug would go through the holes *b'* and *a'*, when it would be ready to drill the next set of holes, and so on. The holes shown are the size they were bored without bushings.

Figs. 15 and 16 show one way of fastening work into a jig when there is not much room. *A* is one corner of a jig. *B* is the clamp, which, it will be seen, is slotted to allow it to be drawn

Digitized by Google

back from the work. The back end of clamp *B* is supported by the jig casting through which it goes. The spring shown keeps the clamp up in place to facilitate putting work in the jig.

Figs. 17 and 18 illustrate another job of jig work. As will be seen, the holes — both those parallel with the jig casting and those at an angle with it — are figured from an imaginary point, which we will call and mark *A*. The angular surface *a*, on which the work to be drilled is set, is machined to the correct angle; then a spot is made true on the outside of the jig at *a* that will cover the imaginary point, when an accurately ground button *B* is set, which button is to be the location from which each hole is to be put in by measurement, the button remaining in place until the bushings are finally in place and the jig tested for accuracy. To set the button, the casting was clamped to an angle-iron so that the surface *a*, Fig. 18, was parallel with the surface plate, and the button was rapped until it was the right distance from surface *a* — in this case $\frac{3}{8}$ inch. The setting the other way was not so particular, so that the holes were the

Digitized by Google

right distance apart and about in the center of the bosses through which they went; but when once the button was set, the distances the holes were from it had to be maintained. To bore the holes marked *b* the jig was clamped to an angle-plate on the milling machine, so that surface *a* was square with machine spindle both ways, when the work was set to bore each hole separately, setting it vertically, by getting the distance from the platen in the center of the button, then from the platen to a true plug in the spindle; setting the machine for two holes, so that the center of the spindle was $\frac{1}{4}$ inch below the button, and $1\frac{3}{8}$ inches above for the other two, then horizontally setting by the surface of the angle-plate to which the jig was fastened or another angle-plate bolted out to one side of the work and square with the machine spindle. To bore the holes that are parallel with the jig, it can be set on its feet square as before and measurements can then be taken from the platen to the button and spindle and from the angle-plate to plugs in the angular holes. After the boring is done, if the job is particular, it is well to measure each

Digitized by Google

hole to see if it is the right distance from the working point, as, in case a mistake has been made, and a hole is not located quite right, it will be easier to rebore it then than after the bushings are in place.

Fig. 19 shows still another method of fastening work into a drill jig. *A* is the work in place, ready for drilling; *a a* is a raised place on the jig. The work is machined where it bears on this raised place, and the planing forms a shoulder that in the drilling is forced up to the line *b*. To put the work in the jig, it is set on to the raised spot, and then by means of cam *B* and eccentric stud *C* it is forced into position, the point of the cam striking into the round corner of the work, throwing it against the two gage points *b* and *b'*. The clamp *D* is then pushed over the work and tightened by the bolt shown. When the cam is released by turning stud *C*, spring *c* throws it out of the way, leaving room to put another piece of work in.

Digitized by Google

LOCATING HOLES FOR BUSHINGS IN JIGS

LOCATING holes for bushings in jigs and drilling templets, when the work cannot be done in the lathe or universal milling machine, may readily be done on the bench or in the vise by the method here shown in Fig. 20.

It is the custom in some shops to use hardened steel bushings, lapped true in the bore, ground taper on the outside to suit holes in the jig and driven in tight. In some few cases they use loose, straight bushings, but as the wear in the jig in time is considerable they generally prefer to have them fit tight.

They lay out the holes for the bushings and drill with reasonable care, and to a size suitable to allow the point of one of the taper reamers *A* to enter. The reamer is fitted on a shank *B*, and is driven by a key as shown. The casting *C* is used for a guide, the bore of which is made a nice running fit to suit the body of *B*. The bottom of *C* is faced square with the bore, and is of certain dimensions relative to the center of it.

Digitized by Google

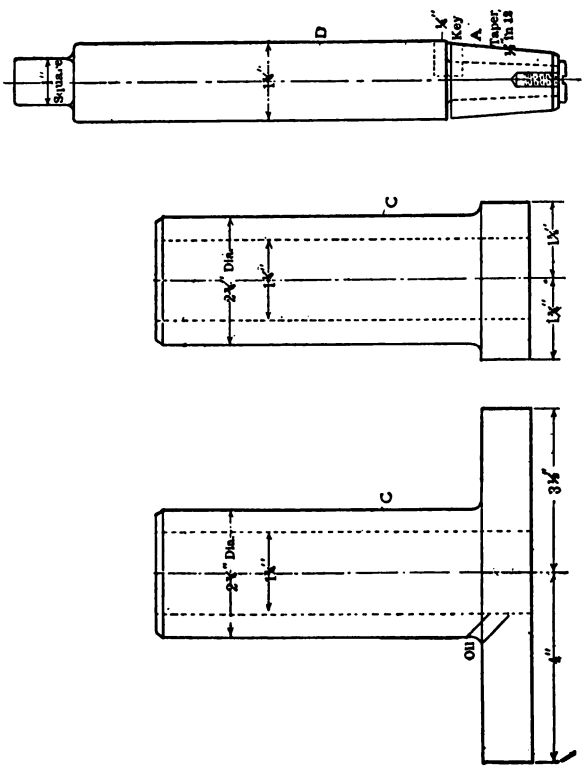

FIG. 20. — Reamer and Guide for Jig Holes.

Digitized by Google

By securely clamping the foot of the jig, locating it by measuring to any of its sides from lines drawn when the original layout was scribed, squareness of the hole and its correctness of location relative to another hole, line, edge or flange, as the case may be, are insured.

An oil hole is provided for use when the piece to be reamed is of wrought iron or machinery steel. Cast-iron jigs are best reamed dry.

For those who have had to drill and ream holes, either straight or taper, to line and without any guide, this tool will be a welcome aid. With its use it is only necessary to drill the holes fairly correct, locate the guide, and the reamer does the rest.

BORING TOOL FOR JIG WORK

FIG. 21 shows an adjustable boring tool, designed for boring holes in jigs, etc. It may be used in either a drilling machine or vertical miller, the latter of course being preferable. *A* is the holder and taper shank combined and *B* the bar pivoted on pin *C*. The bar is clamped

Digitized by Google

by the washer and cap-screw and adjusted by the opposing screws. The tool is backed up by a headless screw and secured by a small set-screw. The pin *C* must be a good fit in the bar, and the pin collar, pin end and clamping washer

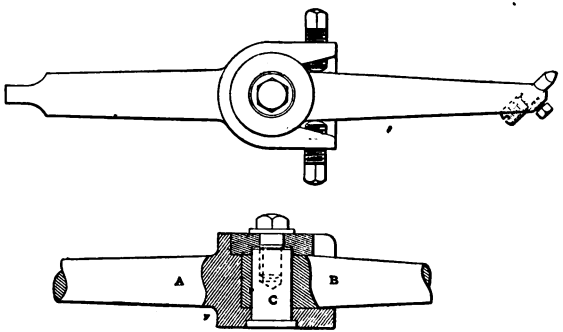

FIG. 21. — Boring Tool for Jig Work

also must fit their respective recesses. The tool shown is of course intended only for finishing; a twist drill or other suitable tool about $\frac{1}{16}$ inch less than the finished size being first used. This tool will make nice clean holes from 1 inch to 4 inches in diameter.

Digitized by Google

ANOTHER BORING-TOOL HOLDER FOR JIG WORK

THE tool shown in Fig. 22 has been found indispensable for boring in the milling machine. The old method of adjusting the cutter by tapping with a hammer, or whatever comes handy, is slow and uncertain to say the least. This tool is not only much quicker of adjustment, but it does away with the uncertainty entirely. While jig bushing holes do not as a rule have to be standard, it frequently happens that holes have to be bored to gage in the milling machine. That operation we have usually found to be difficult and sometimes impossible to perform perfectly by the old method. With this tool it becomes so easy and simple that a novice can do good work the first trial. The shank and squared part are made from one piece of mild steel, except the end pieces, as shown. The boring tool can be removed and a drill substituted for starting a hole. The tool is inexpensive, and will be found to be a gilt-edged investment.

Digitized by Google

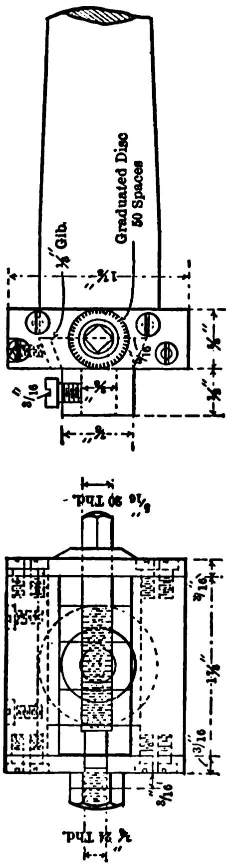

FIG. 22. — Another Boring-tool Holder for Jig Work.

Digitized by Google

SLIP BUSHINGS FOR JIGS

THE sketches show one way, that has been proved practical, of jig drilling a number of holes close together by means of slip bushings. Fig. 23 shows the work drilled, and Fig. 24 a section of jig with a hardened and ground bushing to receive the slip bushings, and a hole for the locating pins, but without the gage points, clamping devices, etc. Figs. 25 and 26 show the two slip bushings, the second one being necessary because of the thin wall there would be between the two largest holes were only one used. In making these bushings much depends on careful

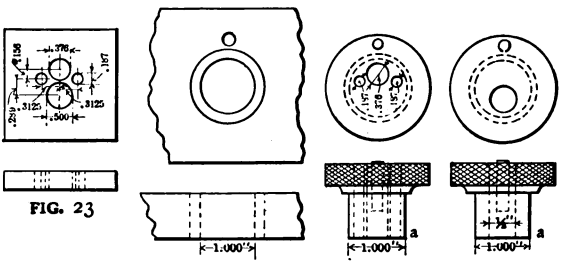

FIG. 23 FIG. 24 Slip Fit FIG. 25 Slip Fit FIG. 26

Slip Bushings.

Digitized by Google

work if satisfactory results are to be obtained in the drilled work; for if the holes are not perfectly concentric and accurately located in the bushings, or if they go out in hardening, the error cannot be altogether corrected in grinding. If, after the holes are lapped, the bushings are chucked, by the flat upper end, on the face-plate so that the large hole in Fig. 25 and the hole in Fig. 26 stand parallel with the platen of the grinding machine, and the ends $a\,a'$ run true, they will be about as good as they can be got.

A LOOSE JIG BUSHING WITH A SPIRAL GROOVE

FIG. 27 shows a plan adopted for preventing loose bushings in drilling and boring jigs from turning while in use, which may be of interest to some readers. As will be seen from the piece enclosed, a spiral groove is milled in the body of the bushing, into which engages the hardened end of a guide or stopping pin, which of course is stationary in the jig.

The spiral groove has many advantages over

Digitized by Google

some other methods seen in use, the principal ones being that the circular friction of the drill or boring bar seats the bushing always against the shoulder, even though the workman should neglect to do so. Also that the cuttings or chips cannot crowd the bushing out of the jig.

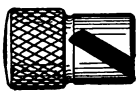

FIG. 27. — Loose Bushing with Spiral Groove.

This feature is especially useful in cases where the bushing must be inserted from the underside of a jig when used as a guide for a boring bar, and, the spiral groove acting as a screw to assist in inserting or removing, allows a closer fit than can usually otherwise be employed, owing to the inconvenience of removing.

Digitized by Google

A CLAMP FOR JIGS, ETC.

THIS clamp, Fig. 28, was designed for locking lead molds. We have extended its use — after some modifications — to locking jigs and other fixtures used in tool and machine shops.

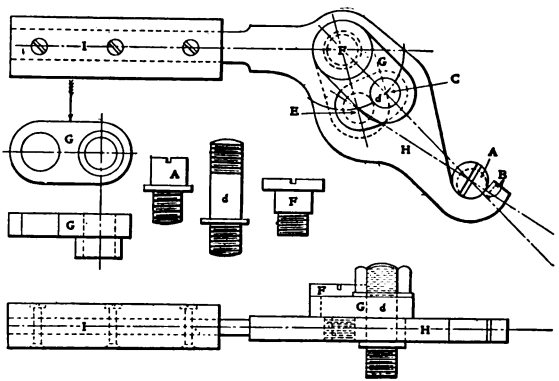

FIG. 28. — A Clamp for Jigs.

The stud *d* is screwed into one member of the jig and the eccentric screw *A* into the other. The link G has a hole in one end of it which passes over the stud *d*, the other end of it swings on the shoulder screw *F*. The part *H* has a circular slot — having *F* as a center — which reaches

Digitized by Google

from the center *C* to the center *E*. The stud *d* is a sliding fit in this slot.

It is obvious that the distance *E A* is greater than *C A*, therefore when the stud *d* is at position *E* it is further from *A* than when it is at position *C;* and it is also evident that swinging the handle *I* will move *d* from position *E* to *C*, or *vice versa.* As the hooked end *B* of *H* is liable to wear, the screw *A* is made eccentric, so that any wear may be taken up by adjusting the screw.

The action of the clamp is this: The parts of the jig are brought together, the hook *B* being swung out of the way to permit this. The stud *d* is in position *E* when the handle *I* is swung — on the stud *d* — in the direction of the arrow until *B* hooks over *A*; any further movement of *I* slides the circular slot in *H* along the stud *d*, drawing *A* and *d* — and consequently the two members of the jig — closer together.

Digitized by Google

SPRING CAMS FOR DRILL JIGS

Some tool-makers consider a cam in a jig an abomination, with a big "A," unless it is of the spring variety like the sketch, Fig. 29.

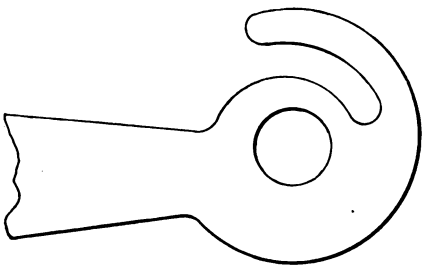

Fig. 29. — Spring Cam for Jigs.

With this sort of a cam the spring will compensate for irregularities in the blank forging or casting, as the case may be, and if the work is of a somewhat delicate nature there is less danger of springing it than with a solid eccentric or cam.

TWO SIMPLE HANDY JIGS

The jigs shown in the sketches, Figs. 30 to 34, are in daily use in the tool room of the National

Digitized by Google

Cash Register Company, and every tool-maker will appreciate their usefulness. The first, Figs. 30, 31 and 32, is for drilling the leaf of a jig

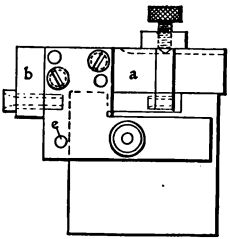

FIG. 30

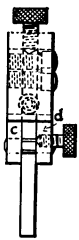

FIG. 31

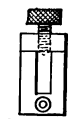

FIG. 32

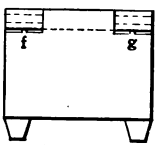

FIG. 33

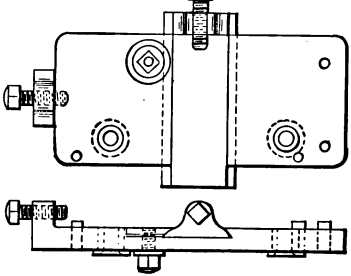

FIG. 34

Two Useful Jigs for Tool Work.

preparatory to broaching for the taper pin upon which the hinge swivels. This jig is designed to drill a leaf $\frac{3}{8}$ inch thick, although there are sizes for each thickness of leaf. The bar *a* is machined

Digitized by Google

$\frac{3}{8}$ inch thick and has an overhanging arm *b* to receive the bushing. The sides *c* and *d*, $\frac{5}{16}$ inch thick and of the shape shown, are then fastened in place with the screws and dowels. The slide which carries the bushing for drilling the second ear of the leaf (shown in detail, Fig. 32) is slotted a close sliding fit for the bar and is held in place when adjusted by the nurl-head screw, the point of which seats in the slot (detail, Fig. 32).

The leaf is put in with the end against the pin *e* and the top against the bar and is then clamped and squared up on an angle-plate and drilled in the drill press. It is then clamped in position on the jig, which has been previously machined as shown in Fig. 33, leaving the stock at *f* and *g* to hold the leaf away from the body of the jig for clearance. These points are afterwards removed.

A drill is now run half through from each side, and the parts, while still clamped, are broached for the pin.

We have all had our experience in swinging this same job upon the face-plate, carefully centering it and just as carefully running the

Digitized by Google

drill through that it may not run off, etc. With this jig the chances of error are reduced to the minimum, besides a great deal of valuable time is saved.

The second jig, Fig. 34, is for drilling milling-machine vise jaws, and of this there are also sizes for each size of vise. The body is a forging with an ear on one end through which the screw that binds the jaw passes. The center is dove-tailed to receive the slide, which forms the adjustment for the different widths of jaws and is bound when so adjusted by the ring and screw. The jaw is put in the jig against the pins, the binding screws are tightened and the whole is then placed on the drill, the jig on top and the jaw flat on the table, and drilled.

We have worked in tool rooms where a milling-machine vise jaw job was almost as bad as a sentence of ten days in jail, for we had to carry around an angle-plate weighing, perhaps, 75 pounds, to square the vise up on to spot the holes, the vise weighing perhaps as much more, besides using a lot of spotting drills which were generally in a sorry state of dilapidation. By

Digitized by Google

this method it is not always necessary to handle even the vise.

A MAGNETIC DRILL JIG

About the most difficult mechanical operation is the drilling of a hole — just where you want it. Even in ordinary (you might almost call it "rough and ready") drilling, more time is spent in getting the drill over the center of the prospective hole than in getting the hole itself. The ordinary, well-known mode of doing this is: A prick punch mark is made where the center is to be; a circle the size of the hole is scratched off and sometimes a few prick punch marks are made on the circumference of this circle. The mechanic brings the drill over the work, or the work over the drill, as nearly central as he can. He brings the drill down and starts the hole, but takes care not to go too deep. He lifts the drill out, and examines his work by comparing it with the circle. He finds that the hole is too much to the right and chips a little bit to the left, so as to crowd the drill over, and tries again.

Digitized by Google

He repeats this over and over, until he finds that the circle made by the drill is central with the circle he has drawn. Sometimes, or rather very often, the drill has gone in to its full diameter before he has reached this perfect result; if this is the case, he chips once more with the hope of getting it right this time, trusting to Providence, and lets her go. Providence, being quite impartial, sometimes helps the mechanic and sometimes the drill. It was with the object of getting the hole where it is wanted without spilling time that the drill jig, Fig. 35, was constructed.

The figure shows the jig in section. *A* is the body, preferably made of soft (Norway) iron. *B* is the jig eye which can be inserted in the body. Any sized jig eye may be used with one and the same body. *C* is a plug which fits the jig eye, and is, at its lower end, made like a center punch. *D* is a coil of magnet wire laid in a recess of the body and held in position by a lead plate calked in tight. *E* is a brass bush which serves to insulate the body from the jig eye.

The *modus operandi* is as follows: A fine prick

Digitized by Google

punch mark is made where the center of the hole is to be. (By the way, it is not necessary to drive the center punch with a sledge hammer to

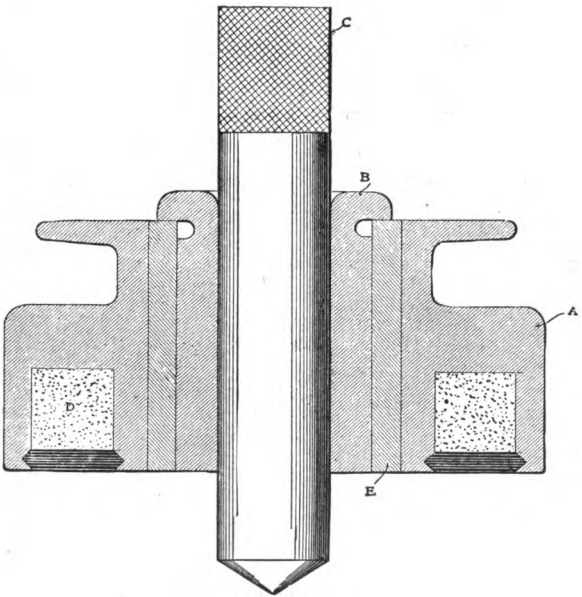

FIG. 35. — Magnetic Drill Jig.

get a start for the drill.) The plug *C* is inserted in the jig, and, holding the jig in the left hand and the center punch in the right, the latter is

Digitized by Google

brought down into the prick mark. The jig is then slid down until it rests on the work. The current is now turned on and the center plug removed, when it will be found that the jig sticks so tight that a true hole can be drilled at the first trial.

The jig we constructed took about one-seventh of an ampere on a 220-volt circuit, so that the turning on of the current was not quite such a big affair as it sounds. An ordinary lamp socket was used for this purpose.

In trying this jig, we used an inch drill. The drill socket fitted so badly in the spindle that it had to be wrapped with paper before it could be used at all. The drill was inserted in the jig before the current was turned on, and consequently drill and jig together were gyrating over the work. The true center of the spindle was of course the center of the circle described by the jig, consequently the center of the jig never coincided with the center of the spindle. While spindle and jig were gyrating the current was turned on, and this brought the movement to a sudden stop. We then scratched a fine line

Digitized by Google

around the jig, after which we started the hole. After drilling the hole and before turning off the current, we scratched another line around the jig; we then turned off the current, removed the jig and found only one line scratched on the work, which showed that the jig had not moved during the drilling. We also found that the drill fitted perfectly in the hole, notwithstanding that the jig was not central with the spindle.

It is not necessary that each jig eye should have its own center punch. One center punch fitting the bore of the brass bush is sufficient.

It should be mentioned here that this jig is to be applied to finished surfaces only. It can be constructed for any voltage, and might be used in any shop where there is an incandescent light circuit.

CORRECTING A DRILLING JIG

A GOOD-SIZED drill jig with about twenty holes, most of them in hinged lids, was returned by the parties for whom it was made as being defective in regard to the location of the holes. An error

Digitized by Google

limit of 0.0015 inch had been allowed on the locations, which were measured from the planed edges of the jig body; but as the shop in which this jig was originally built was not properly equipped for this class of work, it was not surprising that some of the holes were out a trifle more than the specifications would allow. We undertook to correct the location of the holes and get them near enough to blue-print figures to pass the inspector; and as the jig has not been heard from since, the work we did was probably satisfactory.

The Facilities at Hand for Doing the Work

The facilities available for this reconstruction work were a Brown & Sharpe milling machine with vertical spindle milling attachment, standard surface plates, a 24-inch vernier caliper, a micrometer depth gage, a lathe indicator, and a surface gage, the stem of which was a flat bar.

Measuring the Jig to Find the Errors

The first thing to do was to force out all of the original bushings, and then measure the distance

Digitized by Google

of each hole in the cast iron from two sides of the jig body at right angles to each other, which were used as datum surfaces. Fig. 36 shows how the indicator was clamped to the surface-gage stem and applied to the hole to be tested, the jig standing on one of its datum surfaces on the surface plate. As the surface gage was moved slowly from side to side, the hand on the indicator dial would move, and the reading on the dial would be at a minimum when the feeler was at the highest point in the hole. This minimum reading was noted and the indicator carefully withdrawn from the hole, after which it was transferred to another surface plate, as shown in Fig. 37, and placed under the movable jaw of the vernier caliper, the latter being then adjusted till the indicator read the same as it did when in the hole. Used in this way, the indicator was simply a comparator, to tell when two quantities were alike; and it was not necessary to rely on the graduations of the indicator dial as being correct.

After having adjusted the vernier jaw to make the indicator read the same as it did when in the

Digitized by Google

FIG. 36. Measuring the Jig with Surface Gage and Indicator.

FIG. 39 Setting the Vertical Milling Spindle in Line with the Original Holes.

FIG. 37. Getting the Dimension from the Surface Gage with a Vernier Caliper.

FIG. 38. Extension Contact Piece for Jaw of Vernier Caliper.

FIG. 41. FIG. 42. Boring Tools.

FIG. 40. Measuring the Longitudinal Motion of the Platen.

Digitized by Google

hole, the indicator was carefully put back in the hole again to see if the minimum reading was still the same. This was done to guard against the possibility of anything having slipped while making the comparison. The reading of the vernier caliper, added to the distance *A*, Fig. 37, gave the distance of the upper side of the hole above the datum surface. The distance of the lower side of the hole above the datum surface was determined in a similar manner, and a mean of these two quantities, of course, gave the distance of the center of the hole from the datum surface.

When the lower side of the hole was tested, it became necessary to use the attachment shown in Fig. 38 for the movable jaw of the vernier caliper, as then the indicator feeler pointed downward. This was simply a piece of sheet brass lapped flat on the side next to the jaw, and held fast thereto by a clamp made of a short piece of brass tube with a nurled-head brass set-screw. The lower screw in Fig. 38 is to hold the parts together when they are not on the vernier jaw. One reason for making this attachment of brass

Digitized by Google

was so as not to do any damage to the vernier caliper, which did not belong to us. Another reason was that the materials from which to make it were taken from the scrap-box.

The vernier was made to stand upright and do duty as a hight gage by being clamped between two small angle-plates that had been machined all over. The distance *A* was determined by a micrometer depth gage and was, of course, a constant to be added to all vernier readings when used either as in Fig. 37 or Fig. 38. Fig. 36 does not show the actual jig we measured and corrected, but a plain cast-iron block with a hole in it, which will do just as well to illustrate the principles involved, and is much easier to draw than the real thing.

After measuring in this way the distance of each hole from each of the two datum surfaces, we compared the measurements with the blueprint figures, and thus obtained the error or location of the holes as originally bored.

Digitized by Google

Enlarging the Holes and Correcting the Center Distances

The next thing to do was to bore out the holes a trifle larger, and move the center of each hole the amount of the error as previously determined. This was done by clamping the jig to the milling-machine platen and getting the vertical milling spindle in line with the original hole, after which the platen was moved the amount of the error of that particular hole, and the hole then bored out enough to get a cut all the way around.

Setting the Miller Spindle in Line with the Original Holes

The method of getting the vertical milling spindle in line with the original hole is shown in Fig. 39. *B* is the lower end of a $\frac{3}{8}$-inch threaded milling arbor on which *C* is screwed. *D* is adjustable along *C* for different-sized holes, by means of the clamping screw *G*, which passes through an oblong hole in *D*. *H* is the dial part of the indicator, the short plunger of which bears against the top end of the lever *L*, and the bottom

Digitized by Google

end of which bears against the circumference of the hole being operated on. *D* is really an angle piece, but is made of two pieces of straight stock screwed together, the screw heads showing in the plan view in Fig. 39. The apparatus shown in Fig. 39 for holding the indicator dial had to be made in a hurry and we had no time to wait for castings, so had to make it of straight stock.

By slowly rotating *B* the lower end of *L* would travel around the circumference of the hole, and any movement of the hand on the indicator dial *H* would show a want of alinement of the hole in relation to *B*. Then the platen of the milling machine was moved either lengthwise or crosswise, or both, as the case demanded, until no movement of the indicator hand took place during the rotation of *B*. When this was the case we were then sure the milling spindle *B* was in line with the hole as originally bored.

How the Longitudinal Shift of the Platen was Measured

After this the cross-slide was moved an amount equal to the error of the hole in that direction,

Digitized by Google

measuring the movement by means of the regular cross-feed dial; but we could not work the same scheme for the longitudinal movement of the platen, because this machine was an old one that was not provided with a micrometer on that feed screw, and we did not care to make one for this job. The first scheme we thought of using was to place the proper leaves of a thickness gage under the bed stop, but this plan was abandoned in favor of clamping a regular bow micrometer to the under side of the platen of the milling machine, as shown in Fig. 40, and letting the back end of the screw come in contact with the saddle. We did not use this micrometer itself as a bed stop, but had the regular bed stop on the other side of the saddle to hold the platen steady, both when the spindle *B* was in line with the original hole and also after the platen was shifted by the amount of the error in that direction, using the micrometer shown in Fig. 40 only to determine how much the platen had been moved.

When clamped in this position the reading line of the micrometer was hidden by the platen;

Digitized by Google

but as the barrel is split to afford means for adjusting, we used this split to read against. It made a rather coarse line for that purpose, but by using a magnifying glass and using only one side of the split, we got along all right.

The Arbor and the Boring Tools

As the boring device and the indicator holder had to be used alternately for each hole, they were both made to screw on the same arbor, so the arbor could remain in the milling machine all through the alining and boring operations.

The piece shown in Fig. 41 was made of a piece of $1\frac{1}{8}$-inch shafting, the screw *M* binding the cutter, while the screw *N* fed the cutter out for depth of cut. This was used for the larger holes of the jig, while for holes too small for this, but over $\frac{1}{2}$ inch, we took a $\frac{1}{2}$-inch boring tool that had been made for the bench lathe, but had been superseded by a better one. We cut this off as short as the depth of holes would allow, and held it in the piece shown in Fig. 41 by the screw *M*. This $\frac{1}{2}$-inch bar, shown in Fig. 42, had no way of feeding the cutter out for depth of cut, so we

Digitized by Google

made the piece *P* out of sheet brass to be slipped over the end of the bar while adjusting the cutter, but removed it before the boring cut was commenced. For holes under ½ inch we used the boring tools from a bench lathe, held in split bushings in the piece shown in Fig. 41. These we had no way of setting for depth of cut, except by bending them with a hammer after they were clamped in place. This answered very well, as there were only two holes that were under ½ inch. The scheme shown in Fig. 42 for setting out the cutter we think is original, and could be used to advantage on a boring bar held between lathe centers as well as on a bar held in a chuck.

After reboring the holes we measured all the locations again to see if the errors in our own work were any smaller than those of the other fellow, and were very much gratified to find that they all came within the prescribed limit of 0.0015 inch.

Finishing and Measuring the New Bushings

Of course, we had to make new bushings, as the original ones were now too small on the out-

Digitized by Google

side diameters. After hardening, they were held in a jaw chuck while the hole was ground, and then put on an arbor between centers while the outside was ground. We took precautions to have the outside and inside grinding concentric, but in spite of all our efforts some of the bushings had the wall slightly thicker on one side, but only a fraction of 0.001 inch.

After grinding, the bushings were tested by holding horizontally in the bench vise the arbor on which the bushing had been ground, and placing the bushing on that part of the arbor where it could turn freely but without shake, letting the bushing run against the side of the vise jaws to prevent endwise motion, and then letting the feeler of the indicator bear against the outside of the bushing while it was slowly turned with the hand. The indicator in this test was held as in Fig. 36, only with the feeler pointing downward.

When the bushing was found to be eccentric more than 0.001 inch, we threw it away and made a new one; but if the eccentricity was less than 0.001 inch, we marked the thick part of the

Digitized by Google

wall and so placed it when forcing it home that it fell in the direction of the error of location of the hole in the cast iron. In this way we made two small remaining errors offset one another, to some extent, at least, whereas had we forced the bushings in at random, the law of the perversity of inanimate things would have located the thick part of the bushing wall just 180 degrees around from where it ought to go.

STANDARDIZATION OF JIGS AND JIG PARTS

In many factories using a large number of jigs and fixtures special small tools, such as cutters, drills, reamers, taps, counterbores, etc., can be and often are standardized. This point should not be neglected, as it results in a direct and immediate economy.

Still another feature which lends itself to standardization is the design of jigs and fixtures, and their small parts. At first thought it may seem paradoxical to standardize such special tools, where usually only one is ever made from a particular design.

Digitized by Google

However, such standardization is possible to quite an extent, and to a real advantage pro-

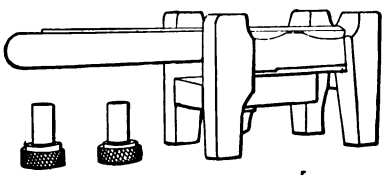

FIG. 43. — Standard Type of Open Jig.

vided a large amount of tool work is carried on. For instance, a system of drill, reamer and tap bushings, both loose and fixed, can be determined upon. Screws for jigs and fixtures can be

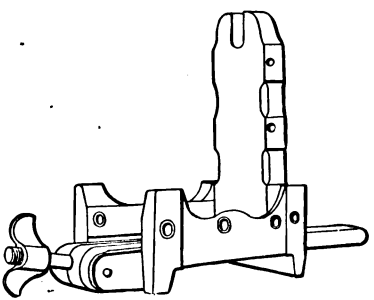

FIG. 44. — Standard Type of Box Jig.

systematically designed for kind and size. Straps, or, at least, strap blanks, can be standardized,

Digitized by Google

and carried in stock. Setting spots on milling and planing fixtures can be designed to use a very few standard setting blocks, except for formed work. Again, jig and fixture castings can be classified into types and styles, and these brought to standards to a certain extent.

In this section we will take up the standardiza-

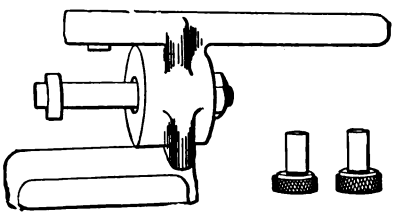

FIG. 45. — Another Standard Type.

tion of small drilling jigs and show a few styles of jigs and their parts. The illustrations and tables giving dimension of the various types of screws, straps, bushings, etc., commonly used in such work should be of value and interest to all tool-makers and others having to do with the construction of jigs, as well as to draftsmen who are responsible for the design of these tools.

Digitized by Google

Drilling Jigs

In the manufacture of duplicate parts, drill jigs form one of the greatest factors in economy and accuracy. Whether the operations to be per-

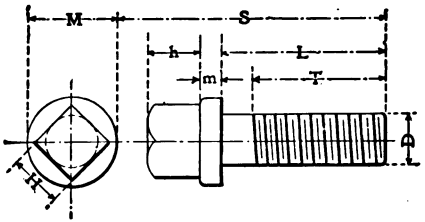

D	Thrd.	L	T	h	m	H	M	S
¼	Shop Standard	1	¾	¼	3/32	¼	7/16	1 1/32
5/16		1	¾	5/16	⅛	5/16	⅜	1 7/16
⅜		1⅜	1	⅜	⅛	⅜	⅝	2
7/16		2	1⅜	7/16	3/16	7/16	11/16	2⅝
½		2	1⅜	½	3/16	½	13/16	2 11/16

Fig. 46. — Collar Head Jig Screws.

formed are simple or complicated, the drilling jig is an indispensable tool, and in no other operation can jigs or fixtures be used to better advantages than on the drill press.

Digitized by Google

The much argued question as to whether we should drill before milling or mill before drilling has never yet been answered to the satisfaction of everyone, and in all probability it never will

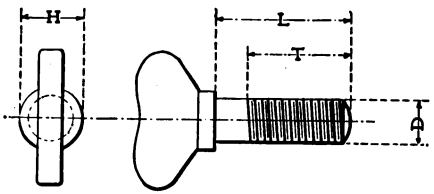

D	Thrd.	H	L	T
¼	Shop Standard	⅜	1	¾
5/16		7/16	1	¾
⅜		½	1⅛	1

FIG. 47. — Winged Jig Screws.

be. While some are firmly convinced that we should drill first, others are just as firmly convinced that the best results can be obtained by reversing the operations. Regardless of all dis-

Digitized by Google

cussion, there are certain fixed mechanical ideas that should be respected, and while one part can be drilled first to the best advantage, it is just as necessary to reverse the operations on another part, while still others can be carried through with equally good results by either order of operations. Some parts are of such an irregular shape that a positive location cannot be obtained except by means of drilled and reamed holes, which necessitates drilling first. On the other hand, with properly constructed jigs, there is less chance for error when locating from a planed, milled, or ground surface. It has been proved that in many instances the parts can be located in the jigs and drilled from the planing or milling with a greater degree of accuracy than they can be planed or milled from the drilled holes. Again, the error in setting the tool or cutter is apt to be greater than in locating the part in the jig.

There are many good points in each argument, but the shape of the part and the nature of the operations must determine the order of the operations.

Digitized by Google

There are several styles of jigs to be considered in taking up the question of standardizing, each one of which is especially adapted to some particular class of work.

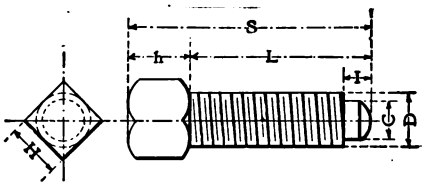

D	Thrd.	L	h	I	C	H	S
¼	Shop Standard	1	¼	⅛	5/32	¼	1¼
5/16		1	5/16	⅛	13/64	5/16	1 5/16
⅜		1⅛	⅜	⅛	17/64	⅜	1⅛
7/16		1⅛	7/16	3/16	5/16	7/16	1 15/16
½		1⅛	½	3/16	11/32	½	2

FIG. 48. — Square Head Jig Screws.

After these styles are selected, castings for a few standard sizes of each style can be made and carried in stock. From these castings jigs can

Digitized by Google

be easily and cheaply made which will meet the requirements of a great many small parts. A few standard sizes of the different styles of straps which are most commonly used can be made and carried in stock. Blanks for bushings of various styles and sizes can be made to be finished as required. Screws which are commonly used for jig purposes can easily be standardized. This system will allow the different parts to be cheaply made in quantities and on a manufacturing basis.

The Open Jig

One of the most common types of jigs in general use and one that is adapted to a great many parts is the *open jig*, Fig. 43. Some convenient sizes to carry in stock are as follows:

Width of Body	Length of Body	Hight of Base
2 in.	3 in.	2 in.
3 in.	4½ in.	3 in.
4 in.	6 in.	4 in.
6 in.	9 in.	6 in.

Seats can be planed in the castings to suit each

Digitized by Google

particular part; or, if a large number of parts are to be produced in a jig, it may receive a hardened-

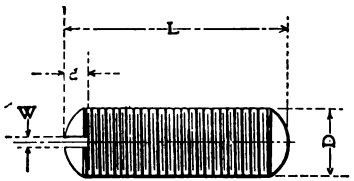

D	Thrd.	L	W	d
3/16	Shop Standard	1/8	.032	1/16
1/4		1/4	.040	3/32
5/16		1	.057	3/32
3/8		1	1/16	1/8
7/16		1 1/4	5/64	1/8
1/2		1 1/2	5/64	1/8

FIG. 49. — Headless Jig Screws.

steel seat. Stops, screws and straps can be placed where needed, and steel bushings or linings can be inserted. These castings will be found very

Digitized by Google

convenient in making jigs for small parts which are to be drilled from one surface only.

A convenient strap to use with these jigs is shown in Fig. 56. These straps should be made of bessemer steel and case-hardened after finish-

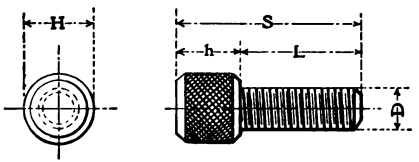

D	Thrd.	L	h	S	H
¼	Shop Standard	¾	⅜	1⅛	⅜
5/16		1	⅜	1⅜	9/16
⅜		1	9/16	1 9/16	⅝

FIG. 50. — Nurled Head Jig Screws.

ing. The slot *G* for the binding screw should not be cut until the strap is selected for use. It can then be located in the proper position and made of such dimensions as to allow the strap to be

Digitized by Google

slipped back out of the way when work is being placed in and taken from the jig.

The Box Jig

Another type of jig in common use is the *box jig*. This jig is generally used when holes are to

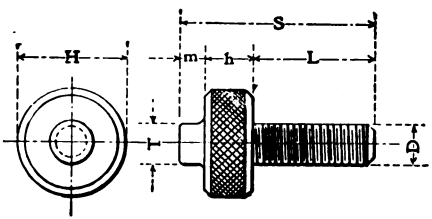

D	Thrd.	L	h	m	S	H	T
¼	Shop Standard	¾	5/16	3/16	1¼	¾	¼
5/16		1	⅜	7/32	1 9/32	⅞	5/16
⅜		1	7/16	¼	1 11/16	1	⅜

Fig. 51. — Nurled Head Jig Screws.

be drilled in two or more sides of the work. Work may be held in these jigs by means of straps and set-screws, or by hinge covers and set-screws,

Digitized by Google

as the nature of the part requires. Such a jig, with a hinge cover, is shown in Fig. 44. Castings of the same general sizes as for the *open jig* will be found convenient if carried in stock.

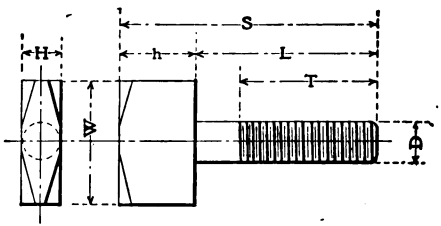

D	Thrd.	H	h	L	S	T	W
5/16	Shop Standard	5/16	5/8	1 3/8	2 1/16	1 3/8	1 1/16
3/8		3/8	11/16	1 5/8	2 5/16	1 3/8	1 3/16
7/16		7/16	3/4	1 7/8	2 5/8	1 1/4	1 5/16
1/2		1/2	3/4	1 7/8	2 5/8	1 1/4	1 5/16

FIG. 52. — Locking Jig Screws.

In Fig. 44 a hinge screw with a wing nut is used to clamp the hinge cover. When this is not convenient, a screw such as shown in Fig. 52 may be used with good results. This screw,

Digitized by Google

when used, should be adjusted so that only a quarter turn will be needed to clamp or release the cover, which should be slotted to admit the head of the screw.

Another Standard Jig

In Fig. 45 is shown another type of jig which is very useful in drilling set-screw holes in collars,

Size of Base	Hight
3 in. x 3 in.	3 in.
4 in. x 4 in.	4 in.
6 in. x 6 in.	6 in.

hubs of pulleys, gears, cams, etc. A jig of this description can often be used for several parts, when interchangeable studs and slip bushings can be made to suit each part. Convenient sizes for castings are shown in above table.

The overhanging arm for the bushings should be cast long and cut off to the required length. The work should be clamped by means of a split washer and set-screw in the end of the stud. Stops can be easily arranged to locate the work.

Digitized by Google

It is not to be understood that a standard stock of castings can be carried that will meet a majority of requirements, but if some are carried, it will be surprising to find the number of parts for which they can be adapted.

Binding Screws

Binding screws should be made in various sizes and with threads to conform to the standard taps with which the shop is provided. When drills of a very large size are used, a screw with a square or hexagon head is best, as the work requires firm clamping. If the drills used are small, a winged screw will be sufficient and more convenient, as it will require less time to manipulate. Some good screws for clamping straps are shown in Figs. 46 and 47. General standard dimensions are given. Of course screws can be made of any length desired.

When the work is to be held against the seat or a stop by means of a set-screw, such screws as shown in Figs. 48 and 49 will be found very useful. General dimensions are also given. If, however, the work is very light, a wing screw can be used.

Digitized by Google

Supporting Screws

Figs. 50 and 51 show screws that are very useful in supporting work against the thrust of drills when the work is of such a nature that it cannot be supported otherwise.

Locking Screw

A convenient hinge-cover locking screw is shown in Fig. 52, together with standard dimensions.

The different sizes of the styles of screws shown are not only used with drilling jigs, but are equally useful with other jigs and fixtures. These screws should be made of screw stock and case-hardened.

Bushings

When drilling and reaming operations are to be performed in the same jig, two slip bushings, one for the drill and the other for the reamer, should be used; if the jig is to be used for a large number of parts, the hole for the bushings should in turn be bushed with a steel lining to prevent wearing. The soft cast iron will wear rapidly if

Digitized by Google

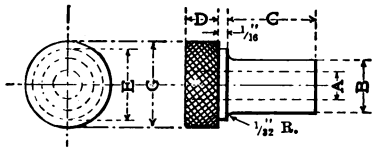

A	B	C	D	E	G
No. 52	1/4	9/16	1/4	7/16	9/16
No. 30	5/16	5/8	1/4	3/8	5/8
No. 12	3/8	5/8	5/16	9/16	11/16
1/4	3/8	11/16	5/16	11/16	13/16
5/16	9/16	3/4	5/16	3/4	7/8
3/8	5/8	3/4	3/8	13/16	15/16
7/16	11/16	13/16	3/8	7/8	1
1/2	3/4	7/8	7/16	15/16	1 1/16
9/16	13/16	7/8	7/16	1	1 1/8
5/8	7/8	15/16	1/2	1 1/16	1 3/16
11/16	15/16	1	1/2	1 1/8	1 1/4
3/4	1 1/16	1	9/16	1 1/4	1 7/16
13/16	1 1/8	1 1/16	9/16	1 5/16	1 3/8
7/8	1 1/4	1 1/8	5/8	1 7/16	1 5/8
15/16	1 5/16	1 3/16	5/8	1 3/8	1 11/16
1	1 3/8	1 1/4	11/16	1 9/16	1 3/4

FIG. 53. — Loose Bushings.

Digitized by Google

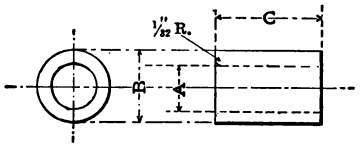

A	B	C
52	1/4	9/16
30	5/16	9/16
12	3/8	9/16
1/4	7/16	9/16
5/16	1/2	5/8
3/8	9/16	5/8
7/16	5/8	5/8
1/2	11/16	11/16
9/16	3/4	3/4
5/8	7/8	3/4
11/16	15/16	13/16
3/4	1	7/8
13/16	1 1/16	7/8
7/8	1 1/8	15/16
15/16	1 3/16	1
1	1 1/4	1

FIG. 54. — Fixed Bushings.

Digitized by Google

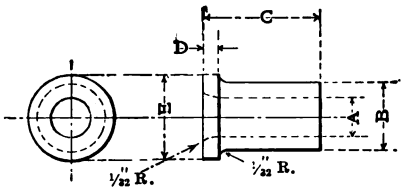

A	B	C	D	E
1/4	7/16	11/16	3/32	9/16
5/16	1/2	3/4	3/32	5/8
3/8	9/16	13/16	3/32	11/16
7/16	5/8	13/16	3/32	3/4
1/2	11/16	7/8	3/32	13/16
9/16	3/4	15/16	1/8	7/8
5/8	7/8	1	1/8	1 1/16
11/16	15/16	1 1/16	1/8	1 1/8
3/4	1	1 1/8	1/8	1 3/16
13/16	1 1/16	1 3/16	1/8	1 1/4
7/8	1 1/8	1 1/4	5/32	1 5/16
15/16	1 3/16	1 5/16	5/32	1 3/8
1	1 1/4	1 5/16	5/32	1 7/16

FIG. 55. — Fixed Bushings.

Digitized by Google

this is not done, and the jig will soon have to be rebound and rebushed.

Three different styles of bushings and dimensions are shown in Figs. 53, 54 and 55. These can be blanked out on screw machines and finished to required sizes as needed, and should be made of tool steel. Allowances should be made in the blanks for grinding and lapping after hardening. Fig. 53 shows a slip bushing; Fig. 54 shows a stationary bushing, and Fig. 55 shows a stationary bushing where tools with stop collars are to be used. Such bushings as shown in Figs. 54 and 55 are also used for linings for slip bushings.

Straps

A standard strap is shown by Fig. 56. A table of dimensions is also given, omitting G and F, which have to be determined for each particular case.

These standards which we have described for jigs and jig parts have been used in practice with good results, and the broad principle of such standardization is one that can well receive attention in a shop doing a large amount of tool work.

Digitized by Google

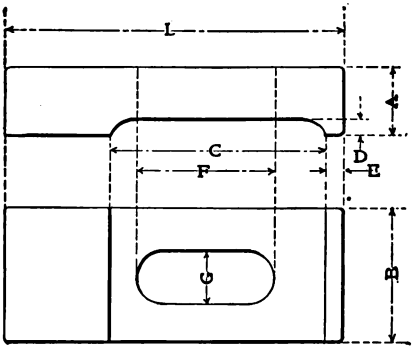

A	B	C	D	E	L
1/8	1	1 1/8	1/8	1/8	2 1/8
1/8	1	1 1/8	1/8	1/8	3
5/8	1 1/4	2	1/8	3/16	3 3/8
5/8	1 1/4	2	1/8	3/16	3 3/8
5/8	1 1/4	2	1/8	3/16	4

FIG. 56. — Jig Straps.

Digitized by Google

FILING FIXTURES

No matter how accurately the machining operations may be performed during the manufacture of interchangeable parts of steel, it frequently becomes necessary to finish certain sections by hand-filing. For such work filing jigs become necessary, especially when the limit of allowable error is less than 0.001 inch, or when the pieces have to be polished at some point impossible to reach by grinding. Five distinct types of fixtures used in the file-finishing of accurately machined low-carbon steel parts are shown by the accompanying sketches.

Fig. 57 represents a filing jig which is used for the work illustrated in Fig. 58. The work consists of two pieces of machined tool steel of the form indicated, which are riveted together. The smaller part is dovetailed, and in the finishing has to be filed upon its upper surface. The jig is made to handle two pieces at once. The base *A* is gray iron; the side locators *B* and *C* are shouldered on their lower surfaces to form channels for the work. The three locators *B*

Digitized by Google

are of right-angle form and are fastened to the base at the back by means of round-head screws. Plates *C* are located and fastened by means of the two dowels and a screw.

The positive locating of the work is accomplished by slides *D*, which engage the piece, Fig. 58, at *E E*. These slides move back and forth in channels in the plates *B* and *C*, and are kept tightly against the work by means of the pivoted levers *F* and spring pins *G*, the levers being pressed down to allow the work to be slid in against stops *H* and then released to hold the work fast.

In Fig. 59 we have a jig for the work shown in Fig. 60. As will be seen, this tool-steel part is tapered and has its ends trimmed; a hole is punched in at *I*, a thin web left at *J*, and a dovetail formed at *K*. Now the edges of the dovetailed surfaces are machined very accurately and are required to be burred and slightly rounded by means of hand-filing.

The fixture base is of gray iron and the locator *L* is of tool steel, hardened and ground, with its locating surface the exact width of the work,

Digitized by Google

Filing Fixtures.

Digitized by Google

and its lower surface inclined to coincide with the upper surface of wedge *M*. Holes in the base are for bolts used in fastening the jig to the bench. Plates *N* are surface locators for the work, and plate *O* is an end stop. Lever *P*, with its slotted arm and the pin connection to wedge *M*, comprise the clamping arrangement. When the lever is pulled back, allowing the locator *L* to descend, the work may be slid in between plates *N* and against stop *O*. Then the lever is pulled forward and the work is clamped, ready for filing.

In Fig. 61 is shown a simple filing jig which is used for holding the work shown in Fig. 62. It clamps the work at *Q Q* and allows it to be file-finished on the surface indicated. The gray-iron base has three countersunk holes for wood screws, which fasten it to the work bench. One jaw is fastened to the base, while the other is adjustable and moves backward and forward as the screw is operated. The inner edge of the jaws are finished to an angle which coincides with the dovetail *Q* of the work.

Fig. 63 illustrates another small manufactured

Digitized by Google

piece of tapered steel which was required to be file-finished at *R* and *S*. The fixture is shown in Fig. 64. The principle of this jig construction is somewhat similar to that involved in the one just described. The clamping jaws have hardened filing surfaces at *T* and *U*, a hight-locating projection at *V*, two opening springs and a clamping screw. The device illustrated in Fig. 65 is used for the work, Fig. 66, which is required to be file-finished at surface and shoulder *A*. Side plates *B* and end-piece *C* of Fig. 65 are hardened; *D* is the body proper; *E* is an end stop; *F F* are screws which fasten *C* to *D*. To admit the work the wedge locator *G* is removed and the work then placed in its seat and against the end stop; then the wedge is forced in and the work held fast and true during the filing operations.

Filing Fixture for the Lathe

Probably many mechanics were surprised when they first learned of the existence of filing fixtures in manufacturing establishments. We first saw such tools in use a few years ago, and must confess that we were surprised at their

Digitized by Google

efficiency. The only discouraging feature of those we saw, and we believe it is present in all of them, is the rapid dulling of the files, especially if the area worked is rather large and requires a somewhat heavy pressure on the file to hold it to its cut. The hardened guides or gage plates, being of about the same degrees of hardness, soon take the keen edge off the file teeth, unless great care is exercised to keep off of these gage plates as far as possible; but in the hands of an experienced filer the files last a reasonable length of time and the superior work produced seems to warrant the little extra outlay on files. Another point is the selection of a file that is quite straight or the work will likely come concave or convex, depending upon the convexity or concavity of the file, as the case may be.

We show herewith a device that is to do work of similar nature, but which is used on the bench lathe or any lathe for making punches with flat sides, or squaring heads on taps, etc. Square, hexagon or other work of the kind that would otherwise have to be taken to the milling machine can, with this device, be finished, after turning,

Digitized by Google

and before removing from the chuck with the assurance that it is as true as it is possible to get it; the same accuracy could be attained only by the exercise of great care if the transfer were to be made from the lathe to the milling machine.

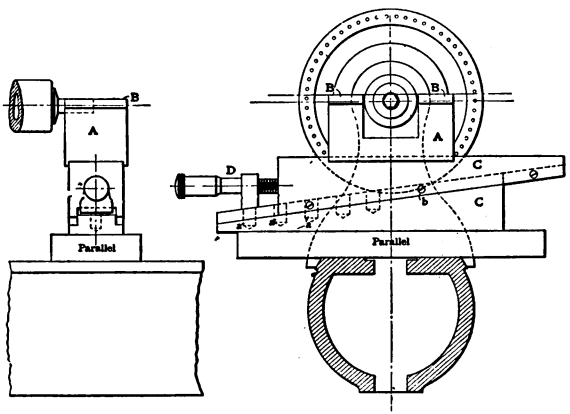

FIG. 67. — Filing Fixture for the Lathe.

Referring to Fig. 67, *A* is a gray-iron block made to the shape shown, with an opening between the jaws of, say, 2 inches, which will allow fairly large pieces to be admitted between them. The top and bottom of *A* are finished parallel and the top is faced with the hardened

Digitized by Google

steel plates *B*. *C C* form an adjustable parallel which is a necessary part of the outfit, unless other means are at hand for securing vertical adjustment of block *A*. This parallel may or may not be provided with the micrometer adjustment at *D*, but there are obvious advantages with the micrometer. The taper of the pieces is optional with the tool-maker, except when the micrometer adjustment is required, when it becomes necessary to adopt a taper that will allow the micrometer screw to be made with a pitch within the capacity of the lathe and give a whole number of graduations on the barrel. The outfit shown here has the pieces *C* planed with a 1½-inch-per-foot taper, and the micrometer screw cut 12½ threads per inch. The micrometer barrel is divided into tenths, so that a 1-inch movement of one-half of the parallel upon the other gives a vertical movement of ⅛ inch, and with the micrometer screw each sub-division on the barrel gives 0.001 inch. The micrometer head can be moved from one hole *a* to another, as the case may require. These holes *a a a* are spaced 1 inch apart, on a line parallel with the

Digitized by Google

base, since the micrometer measures the same way. The small screws *b* are for tightening the parallels when necessary to prevent them from moving along each other. An improvement on these screws would be a small thumbscrew in the center.

The sketch shows a piece having a hexagon head, filed thereon in a small bench lathe, and brings out clearly enough the object and principle of the device. We have used it a great deal in punch and experimental work, special tool-making, etc.

AN ASSEMBLING JIG

In the accompanying sketches is shown a jig for drilling several unlike parts simultaneously to facilitate assembling. The kernel of the idea is that it overcomes the difficulty that would be met if it were attempted to drill semicircular holes in the circular edges of a number of separate, unlike pieces, and also save fitting on the assembling bench.

The jig is shown complete in Fig. 68. In

Digitized by Google

Fig. 69 are shown, respectively, a hub *a*, a gear *b* and a one-tooth transfer gear *c*, which are to be assembled as indicated, the single tooth of *c* to be so placed in relation to any tooth of *b* that its right-hand flank will coincide with the right-hand flank of its companion tooth in *b*, as shown at *d*. The parts of the jig are so arranged that *a b c* are held in their proper relations while two holes are drilled through the flange and edge of the body of hub *a* and the edges of the holes of gears *b* and *c*, when they are removed and placed on racks until the time when they are to be riveted.

The jig is of the usual box or lid type. *A* is the bottom plate, having the usual feet and carrying the taper pin on which the lid B hinges. *C* is a stud driven into the base and further secured by a headless screw and flatted to fit the slot, and *D* is a winged thumbnut to hold the lid in position.

Into base *A* is driven a stud *E*, upon which the work *a b c* is centered, *F* being a hardened circular base plate held to the base by screws not shown. *G* is a thumbscrew screwing freely

Digitized by Google

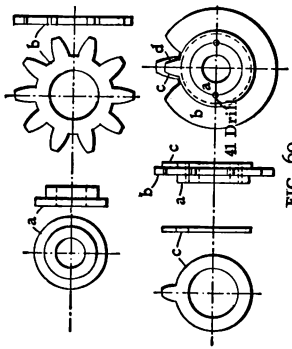

FIG. 69

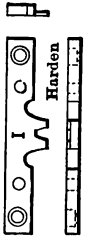

FIG. 70

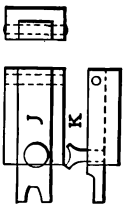

FIG. 71

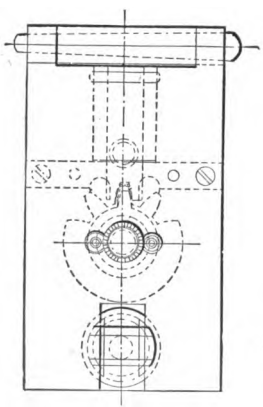

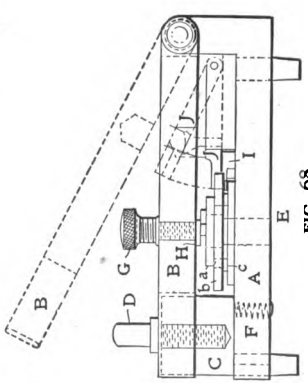

FIG. 68

Digitized by Google

through lid *B* and having fixed at its lower end a round swiveling plate *H* for holding the work in place. The two drill bushings are located as shown.

I, shown in detail in Fig. 70, is a steel piece of rectangular cross-section screwed and doweled to base *A* and having two hardened projections whose inner faces conform nearly to the shape of the single tooth of *c*, and is used for locating *c*, while *J*, shown in detail at Fig. 71, does the same for a tooth of *b*; upon the relative positions of *I* and K depends the accuracy of the jig.

In operation, while the lid is raised, the gears *b* and *c* are first placed upon the hub *a*, and all are slipped over stud *E*, the pivoted locating lever being held up out of the way, *c* revolved until its single tooth drops between the projections of *I*, and *J* dropped to locate one of the teeth of *b;* then the lid is closed and clamped by its thumbscrew and the work clamped by thumbscrew *G* and its plate *H*, when all are drilled together.

While we personally believe the design could be much improved upon, especially in providing

Digitized by Google

compensating features for the unavoidable, slight variations in the thickness of the gear teeth, that is a matter of personal opinion, and the jig was built "according to orders."

Digitized by Google

Digitized by Google

INDEX

PAGE

Accuracy in jig and fixture work 10
Adjustable tool for locating holes in jigs 27
Arbor and bushing for locating jigs 147
Assembling jig 9

Boring master gage plates from models 20
holes in jigs on the miller 6, 10
in the gear cutter 24
in the lathe 1
tools for jig work 40, 41, 42, 43
Box jig 70, 79
Bushings, fixed, for jigs 85, 86, 87
jig, making 5
loose, for jigs 83, 84, 87
loose with spiral groove 45, 46
slip 44
Buttons, jig 3, 14

Cam, spring, for jigs 49
Clamp for jigs 47
Collars, jig for drilling set screw holes in 71, 81
Correcting a drill jig 57

Drilling a jig leaf, jig for 50

Errors, measuring a jig for 58

Digitized by Google

PAGE
Filing fixtures 89
fixture for the lathe 93
Fixed bushings, for jigs 85, 86, 87
Fixture for locating holes in jigs 31

Gage plates, boring from models 20
Gear cutter, jig-making on 24

Holes, adjustable tool for locating 27, 28
for jigs, boring in the lathe 1
in the miller 6, 10

Indicator for milling machine 12
staff for 14

Jig, an assembling 97
and fixture work, accuracy in 10
box 70, 79
bushings, fixed 85, 86, 87
bushings, loose 83, 84, 87
bushing, loose with spiral groove 45, 46
bushings, making 5
button 3, 14
buttons, locating 3, 4
correcting a 57
for collars, etc. 71, 81
for drilling a jig leaf 50
for drilling vise jaws 50
holes, reamer and guide for 39
magnetic 53
making on the gear cutter 24
points in 33
processes of 1

Digitized by Google

PAGE
Jig, open 70, 76
screws, binding 82
collar head 72, 82
headless 77, 82
locking 80, 83
nurled head 78, 79, 83
square head 75, 82
winged 73, 82
work, boring tools for 40, 41, 42, 43
on the miller 6, 19
Jigs, adjustable tool for locating holes in 27, 28
and jig parts, standardization of 69
clamp for 47
fixture for locating holes in 31
indicator for 14
slip bushings for 44
spring clamp for 49
straps for 87, 88
two simple, handy 49

Leaf jig, jig for drilling 50
Locating buttons 3, 4
holes for bushings in jigs 38
Loose bushings for jigs 83, 84, 87
with spiral groove 45, 46

Magnetic drill jig 53
Making jigs, processes of 1
Master plates, boring from models 20
Measuring a jig for errors 58
Miller, jig work on 6, 19
vernier on 7, 8, 17, 18, 19

Digitized by Google

PAGE
Milling machine, indicator for 12
vise jaws, jig for drilling 50

Open jig 70, 76

Points in jig making 33
Processes of jig making 1

Reamer and guide for jig holes 39

Screws for jigs, binding 82
collar head 72, 82
headless 77, 82
locking 80, 83
nurled head 78, 79, 83
square head 75, 82
winged 73, 82
Simple jigs 49
Slip bushings 44
Spring cam for jigs 49
Standardization of jigs and jig parts 69
Straps for jigs 87, 88

Tool, boring for jig work 40, 41

Vernier on the miller 7, 8, 17, 18, 19
Vise jaws, jig for drilling 50

JUN 10 1915

Digitized by Google

Digitized by Google

Digitized by Google

UNIVERSITY OF MICHIGAN
3 9015 06516 9180

Digitized by Google